ADVANCE
Easy Moving

6

ASSEMBLY, USE AND MAINTENANCE MANUAL

SPIDER EXTRACTOR

CE

SPIDER MOTORIZED VERTICAL EXTRACTOR

INSTRUCTION MANUAL

- Type: feeding system for solid fuel boilers
- Model: Spider motorized vertical extractor
- Revision 1.0.7

INDEX

1 INTRODUCTION

Dear customer,
the manufacturer would firstly like to thank you for the choice you made in buying an our product, whose technical features will certainly meet Your needs.
Our products have been designed and manufactured in total compliance with the current regulations, by choosing the best materials to obtain durability and ease of use of the product.
We ask you, therefore, to read this manual carefully and completely, following strictly the instructions contained herein.

1.1 Use of this manual

The instruction manual is a document drawn up by the manufacturer and is part of the product: it integrates the specific rules of application and general rules for people, animals and objects safety. In the event that the product is resold, handed over, rented or sold to others, it must always be accompanied by this manual; therefore, it is recommended to use and keep it with care for the entire operative life of the product.
The main objective of this manual is to make known the proper and safe way to use the equipment.
No part of this manual may be reproduced, copied, or shared in any way, without the written permission of the manufacturer.
The manufacturer reserves the right to make improvements or modifications to this manual
and to the equipment at any time, without obligation to advise third parties.

2 WARNINGS

- Do not use the product for improper uses.
- This product must not be used by children or persons without the appropriate knowledge.
- Only use original spare parts.
- In order to be able to operate the product easily, it must be installed leaving a space around it completely free of any obstructions.
- This product can be installed on pneumatic conveying systems for granular fuels derived from biomass for other uses ask your seller for advice.
- Before first ignition, check that it is carefully installed.
- Never use the structure of the product as a supporting or fixing element for any other support or equipment.
- It is essential to ventilate the room where the product is installed when loading fuel into the tank.
- Remove the inspection doors only to carry out repairs and maintenance after disconnecting the power supply.
- The manufacturer disclaims all liability or warranty if the purchaser or anyone on his behalf makes any changes or adjustments, however slight, to the product purchased.

2.1 Installer’s responsibilities

To ensure proper operation of the product, follow these guidelines:
• Only perform the activities described in these instructions
• Perform all activities in accordance with applicable regulations
• Explain to the user the operation and use of the product
• Explain to the user how to maintain the product
• Report to the user the potential dangers related to the use of the product

3 TECHNICAL DATA, EXPLODED VIEW DRAWINGS AND DIMENSIONS

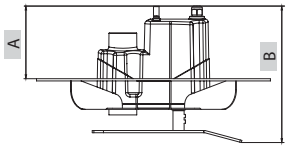

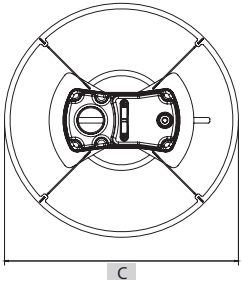

Article		AP3400.00.04
Suction inlet	Ø mm	50 M
IP protection degree	IP	44
Operating temperature min/max	°C	0 ÷ 40
Degree of humidity min/max	%	30 ÷ 95
Power supply	V ac	230
Frequency	Hz	50/60
Absorbed power	W	25
Max absorption	A	0,24
Fuse		5x20 T2A
Insulation class		1
Revolutions per minute	RPM	12
Weight	Kg	17
Max capacity (pellet)	Kg/h	120
Misura A	mm	130
Measurement B	mm	245
Measurement C	mm	420

English

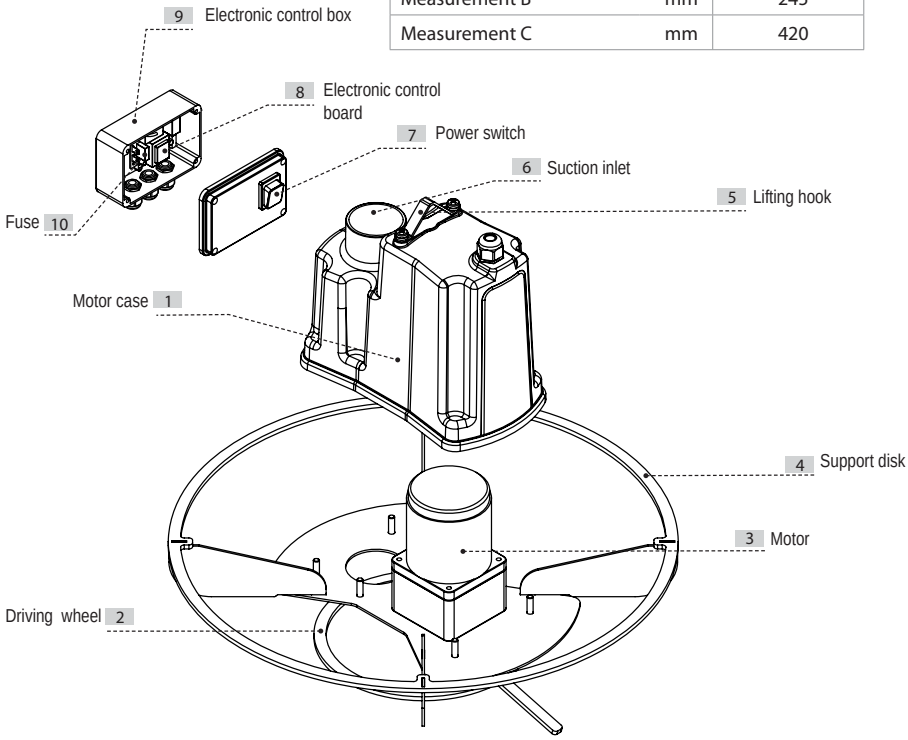

3.1 Identification plate

Do not remove or damage the identification plate.

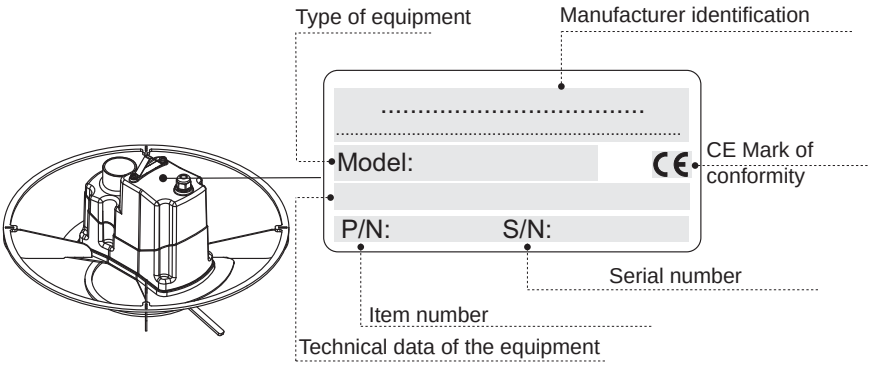

3.2 Safety symbols

DANGER OF VOLTAGE OR ELECTRICAL CURRENT
Danger of serious personal injuries.
During maintenance operations, always disconnect the power supply and make sure that it cannot be restored.

DANGER OF CUTTING
Danger of serious personal injuries.
During maintenance operations, always disconnect the power supply and make sure that it cannot be restored.

DANGER OF AUTOMATIC STARTING
Danger of serious personal injuries.
During maintenance operations, always disconnect the power supply and make sure that it cannot be restored.

DANGER FOR THE HAND WHEN THE SCREW CONVEYOR IS IN OPERATION
Danger of serious personal injuries.
During maintenance operations, always disconnect the power supply and make sure that it cannot be restored.

It is recommended to pay full attention to pictograms and warnings of danger and prohibition in the present different parts of the equipment: if not respected, hazardous situations may occur.

4 PACKAGING CONTENT

Check that the product corresponds to what was ordered and that there is no obvious damage caused by transport, otherwise notify the retailer immediately.
After opening the packaging, check that the material contained in the package is conforms to the list below:

1) N°1 Verical extractor
2) N°1 control panel
3) N°1 use and maintenance manual
4) N°1 warranty form

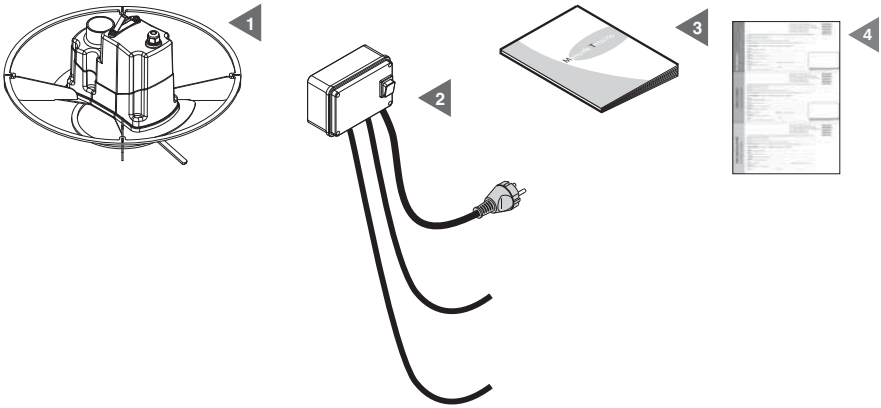

5 PROPER USE OF THE PRODUCT

The product has been designed to be installed for the pneumatic transport of pellets or other biomass fuels with a medium-fine size; it has the task of taking the fuel out of the summit of the heap contained in a tank of limited size.
This product is suitable for the extraction of biomass fuel such as pellets, olive pomace, wood chips, crushed shells of dried fruit, corn, but it cannot work with fuels having a very fine size, or having excessive dimensions and, in any case, having lengths over 40 mm or diameter greater than 15 mm.
It is recommended to use only ENplus A1 certified pellet.
In order to collect the fuel, the product must be driven by a remote control (supplied) located outside the fuel tank, which in turn must be managed by a system that optimizes the operation of the entire pneumatic transport system.
Once installed and connected, the product must be placed on top of the fuel heap from where, through the driving wheel, it collects fuel until the tank is almost completely empty.

5.1 Placing the product in the storage tank

In order to allow the correct functioning of the extraction system, the following requirements must be met:

- Maximum hose anchor height 2.2 / 2.5 m (from the bottom of the storage tank)
- Square or circular base of the storage tank.
  In the case of irregular shapes of the base of the stock tank or sides exceeding 2 m, to facilitate the work of the Spider extractor, it is recommended to add hopper sides with a 45° inclination.
  In any case, the maximum working area from the extractor to the flat bottom of the storage tank must be a maximum of 3.5 square metres, with a diameter of the working area of approximately 2 m.

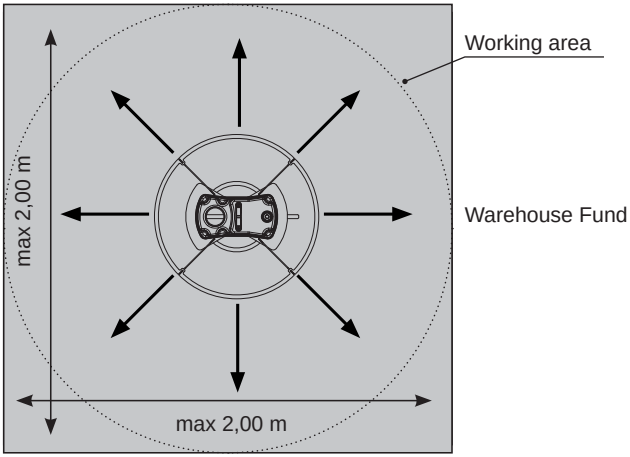

The loading inlet in the pressure filling tanks (through tanker) must be offset by at least 50 centimeters from the anchorage point where the flexible hose is connected to the extractor, so that it does not create damages during pressure filling. It is also advisable to provide a rubber bumper in front of the loading inlet.
Leave a space of approximately 30/50 cm between the hose anchorage point and the point of maximum fuel filling to allow the extractor to be lifted during the filling phase.
A special kit is available for lifting the extractor.
To allow the correct functioning of the extractor, the length of the flexible hose and the anchoring to the ceiling must be adapted, depending on the height of the room, according to the following indications:

- Fix the anchoring point of the flexible hose to the ceiling in correspondence with the center of the base of the stock tank;
- Measure the length of the hose as follows:

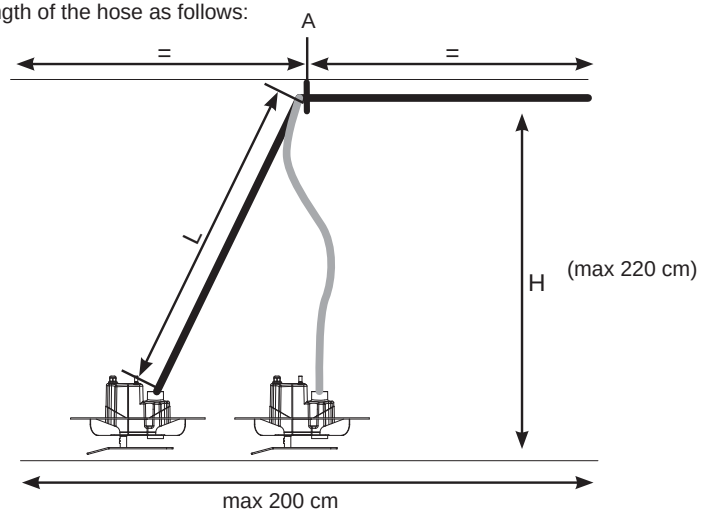

A - Anchorage point			
H - Height of anchorage to ceiling (cm)	180	200	220
L - Length of flexible hose (cm)	180 - 210	200 - 220	220 - 240

For storage tanks with a side of less than 180 cm, use the same dimensions specified for a room with an height of 180 cm.

For stock tanks with a round base, the maximum diameter allowed is 220 cm and the maximum anchoring height is 250c m. compared to the tank floor.

For large tanks with a rectangular or irregular base, please contact our technical department for feasibility checks.

6 INSTRUCTIONS FOR THE INSTALLATION OF PLANT SYSTEMS

Consider that in pneumatic fuel transport systems there are two different types of pipe features:
A sections of pipes where only air and eventually dust pass through
B- sections of pipes where both air and fuel pass through
Mandatory all sections of piping through which the fuel passes must be made with PU or steel pipe and they must be connected to be antistatic.
We remind you that the lengths of the various pipe sections described in our manuals and catalogs are purely indicative: when we speak of “available length” we mean the total development of the various sections.
It is always advisable to make mainly straight and horizontal piping sections and, in any case, with the least number of changes of direction and vertical paths.
For all the sections where fuel passes, it is recommended to follow these simple rules:
the maximum length allowed for the various sections of piping depends on the components chosen for your system:
1- the characteristics and technical data provided for each component must always be evaluated in advance, so that the system works at its best and has the required characteristics.
2- in two-pipe systems (fuel suction and air return to the silo) the limits on the lengths are generally much lower and never exceed 10 meters. With some products pipe lenght cannot be more than 3 meters.
3- in single-pipe systems, the maximum length allowed for the various sections of pipe, despite being limited by the components chosen for your system, is more generous, but even in these cases it is necessary to evaluate in advance the characteristics and technical data provided for each component installed.
4- paths with many curves or with very close curves should always be avoided.
5- the minimum radius of the curves must be equal to or greater than 0.5 meters.
6- sections of pipes that include both positive and negative siphons must be avoided.
7- the sections of horizontal pipes must be kept perfectly leveled.
8- vertical pipe sections longer than 3.5 meters must always be avoided and at the bases of these the minimum radius of the bends must be equal to or greater than 1 meter
9- the sections of piping where fuel passes must be well fixed at least every 1.5 meters.
10- the pipe sections may be built-in or installed under flooring, but only for very short linear traces and only by inserting them into an additional casing pipe of properly larger diameter.
It is recommended to use only pipes, fittings and accessories present in our catalog, as they have been designed, tested and built specifically for these systems.
Before installation and start-up of the system, it is essential to carefully read the instructions supplied with the various components and in case of doubts it is advisable to contact specialized personnel.
The realization of the systems and the installation of the components must always meet the safety standards corresponding to the type of rooms in which they are positioned.

6.1 Connection to the piping network

To connect the roduct to the fuel transport hose, use a Ø 50 mm antistatic hose of a suitable length (included in our catalog) to allow the product to move inside of the tank.
Fix an end of the hose to the product with a steel hose clamp (included in our catalog), then a piece of copper wire inside the hose should be stripped and put in contact with a grounding network to avoid static current in the system.

English

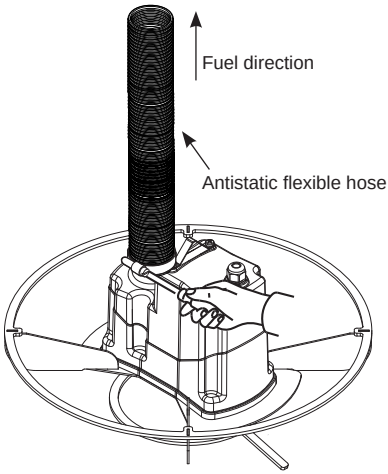

The other end of the hose must be connected to the rest of the fuel transport system, which can be made with antistatic hose or steel pipes, also present in the our catalog.

6.2 Electrical Connection

Before making the electrical connection, check that the supply voltage corresponds to the one required and that the electrical system to which the product is connected is done in compliance with current regulations.

Firmly fix product output cable to the flexible hose till the exit of the tank, position and fix the control panel out of and near the tank on a fixed and sturdy support (wall), then connect the control panel as highlighted in the following drawing.

Connection to control panel

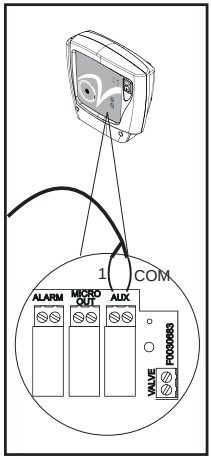

Connection to integrated central unit

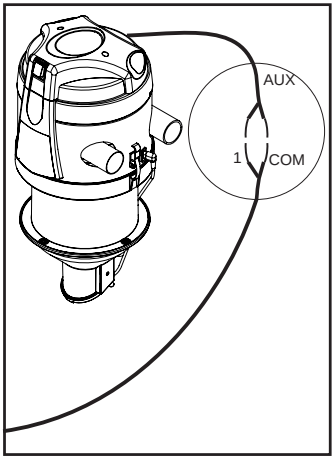

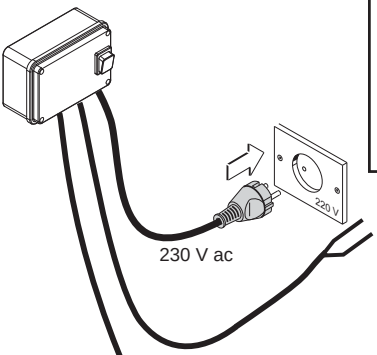

Connect the two output wires from the control panel named AUX to the corresponding AUX cable of the integrated central unit (if present) or to the corresponding terminals called AUX located inside the control canel (if present).

Connect the four-wire cable from the product to the corresponding cable from the control panel as shown in the following drawing (put any connection inside a junction box outside the fuel storage tank).

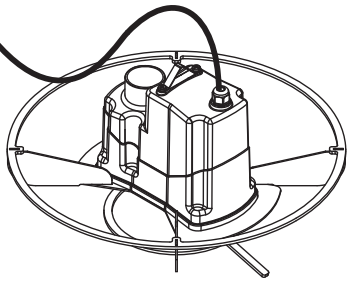

product-control panel connection.

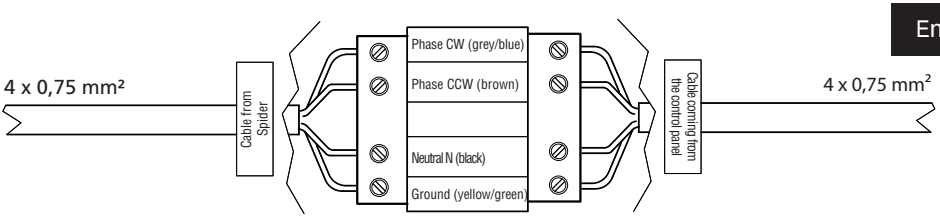

7 START UP AND USE

The product start is controlled by the pneumatic transport control system in the integrated central unit or in the control panel: it usually happens with a delay of 3 seconds from the start of the system itself to allow the emptying of eventual fuel remaining in the pipes.
Thanks to the rotating system of the driving wheel, the product moves the fuel in front of the suction inlet and, with the same system, once it reaches the bottom of the tank, it can go looking for fuel still present.

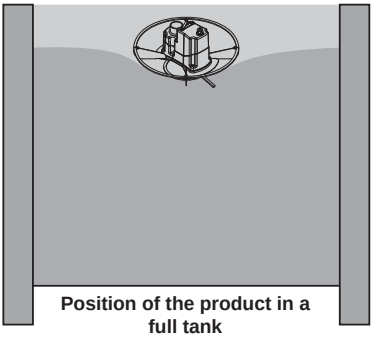

Position of the product in a full tank

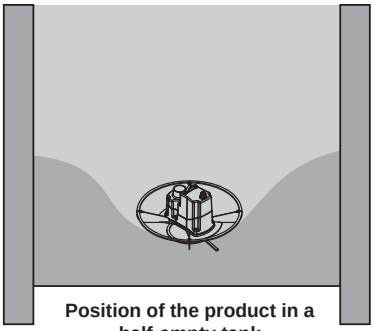

Position of the product in a half-empty tank

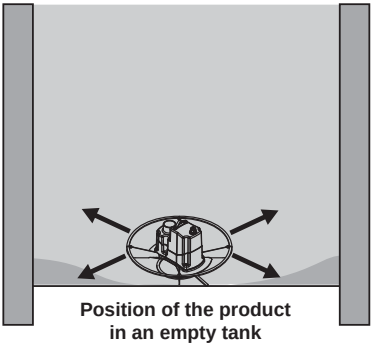

Position of the product in an empty tank

The rotating system of the driving wheel is determined by a timer allowing its sense inversion: this rotation time can be changed by positioning the microswitches in the control panel as shown in the following drawing.
The rotation time of the driving wheel should be adjusted depending on the fuel density: correct adjustment allows the product not to immerse excessively in the heap and to prevent the hose from excessively winding up.
To make any change to the standard revolution time, proceed as shown in figure 1 and in the table below, not before removing the power supply from the control panel.

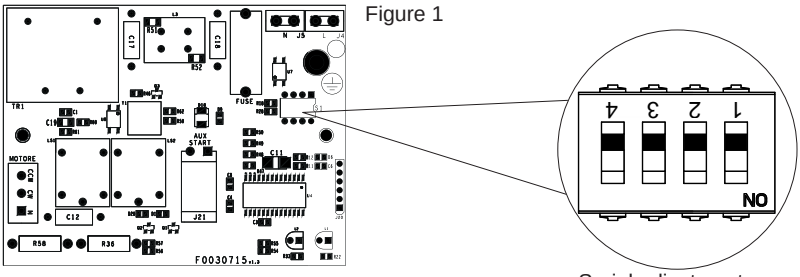

Figure 1

Serial adjustment
45 seconds

TABLE 1

Clockwise / anti-clockwise rotation time = 15 seconds

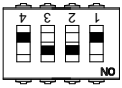

Clockwise / anti-clockwise rotation time = 30 seconds

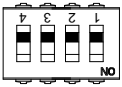

Clockwise / anti-clockwise rotation time = 45 seconds *

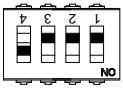

Clockwise / anti-clockwise rotation time = 60 seconds

Clockwise / anti-clockwise rotation time = 75 seconds

Clockwise / anti-clockwise rotation time = 120 seconds

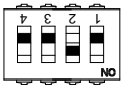

Clockwise / anti-clockwise rotation time = 150 seconds

* The factory set time is 45” for each direction of rotation.

7.1 Switching on and use

Before commissioning the product make sure that:
- The hose allows the product to reach every part of the bottom of the tank
- the hose is correctly and securely fixed over the center of the tank bottom
- electrical connections have been carried out according to law, as well as the electrical system to which the product has been connected
- The driving wheel is well secured and free to move in both directions of rotation
- There are no foreign bodies inside the storage tank

At first ignition it is advisable to enter only a small amount of fuel in the storage tank to test the system.
Before filling the tank with fuel, the product should be raised over maximum level of filling: for this purpose, the our catalog offers the lift system.
Once the tank is filled with the fuel, the product should be positioned at the center of the heap in a small cavity, see figure 1.

Figure 1

When filling the storage tank, level the fuel and place in the center of the tank a depth of about 30 cm.
Place the product in the cavity.

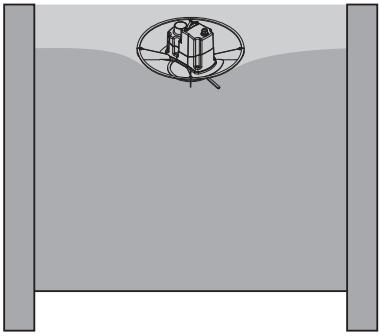

After reading also the manuals of all the components of the system you can position the control panel switch on 1 and start using the fuel transport system by doing the adjustment operations described in the manual of control panel or in the manual of integrated central unit.

Control panel

Integrated central unit

When the system is not operating it is recommended to position the control panel lighted switch on 0.

8 MAINTENANCE AND END-OF-LIFE

Before carrying out any maintenance operation, it is obligatory to disconnect the power supply cable from the main socket and to aerate the premises in which it is installed for at least 15 minutes. Complex or long maintenance operations must be done out of fuel storage and heating unit premises. Any maintenance and repair operation must be carried out by experienced personnel and authorized by the manufacturer.
In the absence of a specific maintenance plan, a complete product inspection is recommended for each filling of the storage tank or at least yearly .
The checks to be carried out at least yearly are:
- Check the antistatic pipe grounding conditions and the electrical system conditions
- Check the electrical wiring conditions
- Check the flexible hose conditions
- Check system anchorage conditions above the warehouse
- Verify that product driving wheel is free to rotate in both directions
- Check the tightening of the driving wheel fixing screws on the product crankshaft
- open the plastic housing and remove any traces of dust inside

It is also advisable to thoroughly clean the fuel storage tank at least annually, in order to avoid dust accumulation and presence of foreign bodies.

8.1 Spare parts

To guarantee longevity and optimum performance of the product, it is recommended to use only original spare parts.

DESCRIPTION
Gear motor 25 W
Circuit board
0-1 Switch
Protection carter

8.2 End-of-life

The disposal of packaging, accessories and machine must be executed in accordance with applicable laws, ensuring the recycling of any of the core components.

9 SAFETY REQUIREMENTS FOR FUEL STORAGE TANKS

SAFETY REQUIREMENTS for pellet storage tanks with capacity up to 10 t

Keep the doors closed. Access is permitted only to authorized personnel under the supervision of a person outside

Do not smoke and approach flames or other sources of ignition.

Danger of death due to high concentrations of carbon monoxide (CO) and lack of oxygen.

In the 4 weeks after the fuel filling, enter only with a CO detector.

Aerate the storage room for at least 15 minutes before entering and keep the door open during your permanence.

Ensure an adequate and permanent aeration of the storage room through vent covers, openings or fans.

Wounding risk for moving systems

Turn off the boiler at least one hour before the pellet is delivered.

Proceed to the filling according to the requirements of the boiler manufacturer and the pellet supplier.

Protect pellets from humidity

In case of fire suspect keep the front door and any other opening of the storage room close and call the firemen.

10 WARRANTY

PRODUCT LIMITED WARRANTY CONDITIONS

The Manufacturer guarantees to the original purchaser the absence of defects in material and workmanship of the product for the period stated, from the date of purchase. Except as prohibited by applicable law, this warranty is non transferable and it is limited to the
original purchaser. The present warranty gives the buyer specific legal rights and the possibility to claim rights which can vary under local laws.

Read all warnings and instructions before using the product purchased.

The entire liability of the manufacturer and your exclusive remedy for any breach of warranty will be at the discretion of the Manufacturer:
(1) To repair or replace the product, or (2) refund the purchase price, provided that the product has been returned to the point of purchase, or such other place as may be specified by the manufacturer, with a copy of the sales receipt or detailed and dated receipt. The shipping and handling are not free of charge, except in cases where this is prohibited by applicable law.
To repair and replace the product, the manufacturer may, at their own discretion, use new, refurbished or used parts in good working condition. Any replacement product will be warranted for the remaining time of the original warranty period, or for any period of time that complies with the provisions of the current law.

This warranty does not cover problems or damage resulting from (1) accident, abuse,
misapplication, repair, alteration or unauthorized disassembly; (2) maintenance operation, use which is not in accordance with the product instructions or connection to an improper voltage supply; or (3) use of consumables and spare parts which are not supplied by the manufacturer or authorized service center.

Valid warranty claims are generally processed through the point of purchase of the product.
Please agree this detail with the retailer where you purchased the product.
The Warranty claims that cannot be processed through the point of purchase, as well as any
other product related questions, should be addressed directly to the manufacturer. Addresses and contact information for customer support can be found at the internet address.
Except as stated by relevant laws in force, any implied warranty or condition of
merchantability or suitability for a particular purpose relating to this product is limited to the duration of the Limited Warranty period for the specific product purchased.

Some jurisdictions do not allow limitations on the duration of implied warranties or the exclusion or limitation of incidental or consequential damages, so the above limitation may not apply to you. This warranty gives you specific legal rights and you may have other rights that vary from state to state, or from jurisdiction to jurisdiction.
Consumers have legal rights under applicable national legislation governing the sale of
consumer products. Such rights are not affected by the warranties in this Limited Warranty.

No dealer, agent, or employee of the manufacturer is authorized to make any modification, extension or addition to this warranty.

11 CERTIFICATION

Declaration of absence of harmful substances

The manufacturer declares that their products and equipment are made with materials compliant with the current regulations regarding protection of health and the environment and does not contain substances classified as SVHC (Substance of Very High Concern) in accordance with Regulation EC 1907/2006 (REACH, or registration, evaluation, authorization and restriction of chemical substances).

Although in the working cycles of raw materials and our products such substances are not used, their presence in the size of p.p.m. (parts per million) cannot be excluded due to micropollution of raw materials.

EC declaration of conformity

The Manufacturer declares that its products and equipment comply with the following standards:

EN ISO 12100:2010 (Risk Assessment Calculator)
EN ISO 14121-1 (Safety of machinery)

And following directives:

N° 2006-42-CE
N° 2014/35/UE (LVD)
N° 2014/30/UE (EMC)

SPIDER EXTRACTOR

F0920252.1

ADVANCE
Easy Moving

info@advanceeasymoving.com - www.advanceeasymoving.com